ICETECH
ICE MAKERS

TECHNICAL MANUAL

CD/GR R290 ELECTRONICS RANGE

MODELS:

CD 50C
CD 90C
GR 180C
GR 230
GR 450
GR 650
GR 1100

READ THIS MANUAL CAREFULLY, ESPECIALLY THE INSTALLATION AND MAINTENANCE SECTIONS. THE INSTALLATION OF THIS APPLIANCE MUST BE CARRIED OUT BY THE TECHNICAL ASSISTANCE SERVICE.

INDEX

1. INTRODUCTION....4

1.1. WARNINGS 4

1.2. MACHINE RECEPTION 6

2. INSTALLATION 8

2.1. ICE MACHINE LOCATION 8

2.2. ICE MACHINE LEVELING 9

2.4. MINIMUM DISTANCE TO OBSTACLES 9

2.5. WATER SUPPLY CONNECTION 10

2.6. DRAIN CONNECTION 11

2.6.1. GRAVITY DRAINAGE 11

2.6.2. DRAIN CONNECTION BY PUMP 11

2.7. ELECTRIC CONNECTION 12

3. PRIOR CONTROL AND START-UP 13

3.1. PRIOR CHECK 13

3.2. ASSEMBLY OF THE DISPERSION CONE 13

3.3. START UP 14

4. CONTROL DISPLAY 15

5. DESCRIPCIÓN DE COMPONENTES 16

5.1 EQUIPO DE REFRIGERACIÓN 16

5.2 HYDRAULIC EQUIPMENT 17

5.2.1 Hydraulic system compact machine 17

5.2.2 Modular machine hydraulics 17

5.2.3. Drainage by pump (only for compacts) 18

5.2.4 Water level control 19

5.3 ELECTRICAL EQUIPMENT 20

5.4. SINGLE PHASE ELECTRONIC BOARD 21

5.4.1 Inlets 22

5.4.2 Outlets 22

5.4.3 Signaling LEDs 23

5.4.4 Setting the DIP switches 24

5.4.5 Functions of the internal button on the plate (RT). 25

5.5 THREE-PHASE ELECTRONIC BOARD 26
5.6 ELECTRONIC BOARD FOR DRAINAGE BY PUMP 27
5.7 MODBUS 28
6. OPERATION SEQUENCE 29
7- ALARMS 30
7.1 High pressure safety switch 30
7.2 Geared motor alarms 30
7.2.1 Temperature shutdown of the geared motor 30
7.2.2 Stop of the geared motor due to current below the lower limit 30
7.2.3 Stop of the geared motor due to current above the upper limit 31
7.3 Shutdown due to low water level 31
7.4 Shutdown due to lack of water consumption 31
7.5 NTC sensor alarm 31
7.6 Blocking alarm 32
7.7 Shutdown by phase sequence 32
7.8 Operation of alarm history 32
8. MAINTENANCE AND CLEANING PROCEDURES 33
8.1 CLEANING OF AIR CONDENSER 34
8.2 CLEANING OF WATER CONDENSER 34
8.3 CHANGE OF WATER FILTER 34
8.4 CLEANING CYCLE 35
8.4.1 Decalcification process 36
8.4.2 Disinfection process 36
8.7 MAINTENANCE TABLE 37
9. TROUBLESHOOTING GUIDE 38
9.1 GENERAL QUESTIONS 38
9.2 PUMP DRAINAGE 39
10. TECHNICAL INFORMATION 40

1. INTRODUCTION

This manual has been created to provide the installer with information to carry out a correct installation and for the effective maintenance of the machine.

Furthermore, the user will find in the document a section referring to the cause of possible incidents, as well as complete information on their resolution.

Therefore, it is recommended to keep the manual in a safe place to resolve any questions related to the operation of the machine during its useful life.

1.1. WARNINGS

- The installation of this equipment must be carried out by the Technical Service.
- Connect only to a drinking water distribution network.
- Use the new hoses supplied with the appliance. Old hoses must not be reused.
- The socket must always be located in an accessible place.
- When positioning the appliance, make sure that the power cord is not trapped or damaged.
- Do not place multiple portable power outlets or portable power sources at the rear of the appliance.
- Always disconnect power to the machine before any cleaning or maintenance service.
- Any necessary change in the electrical installation for the proper connection of the machine must be carried out exclusively by qualified and certified professional personnel.
- Modifying or attempting to modify this machine is extremely dangerous and will void the warranty.
- The appliance must not be used by persons (including children) with reduced physical, sensory or mental capabilities, or lack of experience and knowledge, unless they have been given supervision or instruction.
- Connect only to potable water supply. This machine is not intended to be used outdoors or exposed to rain.
- The machine must be connected using the power cord supplied with the equipment. It is not intended to be connected to a fixed pipeline.
- To avoid danger due to instability of the appliance, it must be fixed in accordance with the instructions.

If the power cable is damaged, it must be replaced with a special mounting cable that will be supplied by the manufacturer or after-sales service. This replacement must be carried out only by a qualified technical service.

It is mandatory to connect the equipment to ground to avoid possible electric shocks to people or damage to the equipment. The machine must be grounded in accordance with local and/or national regulations. The manufacturer disclaims any responsibility in the event of damage occurring due to the lack of ground installation.

To ensure the proper functioning and efficiency of this equipment, it is very important to follow the manufacturer's recommendations, especially those related to cleaning and maintenance operations, which must only be carried out by qualified personnel.

ATTENTION: The intervention of unqualified personnel, in addition to being dangerous, can cause serious breakdowns. In case of damage, contact your dealer. We recommend always using original spare parts.

ICETECH reserves the right to make changes to specifications and design without notice.

WE REMIND YOU THAT MAINTENANCE AND CLEANING OPERATIONS ARE NOT INCLUDED IN THE WARRANTY AND THEREFORE, THEY WILL BE BILLED BY THE INSTALLER.

This sign indicates "Risk of Fire/Flammable Materials" due to the use of flammable refrigerant.

For this reason, the following warnings should be considered:

Keep the openings for ventilation of the appliance casing or built-in furniture without obstructing it.

- Do not use mechanical devices or other means to accelerate defrosting, only those recommended by the manufacturer.
- Do not damage the refrigerant circuit.
- Do not use electrical devices inside the food compartments, unless they are recommended by the manufacturer.
- Explosive substances, such as aerosols with flammable propellant, must not be stored in this appliance.

In case of refrigerant leak:

- Do not generate a flame in the surroundings of the appliance.
- Do not turn on/off switches or connect/disconnect plugs in the area of the appliance.
- Do not use a direct flame.
- Immediately ventilate the area of the appliance by opening doors and windows.
- Call an authorized technical service.

Disposal of the ice machine: ICETECH encourages you to follow the regulations of each country regarding the ecological disposal of electrical and electronic devices such as this. The user who wants to dispose of this equipment must contact the manufacturer and follow the appropriate differentiated collection method for subsequent treatment.

1.2. MACHINE RECEPTION

Inspect the outer packaging. In case of damage, make the corresponding claim to the carrier. To confirm the existence of damage, unpack the machine in the presence of the carrier and note any damage to the equipment on the receipt document or transport document.

Always indicate the number and model of the machine. This number is printed in three places:

(1) Packaging: On the outside it contains a label with the serial number.

(2) Exterior of the unit: On the rear panel of the unit there is a label with the same characteristics as the previous one.

(3) Nameplate: On the back of the machine.

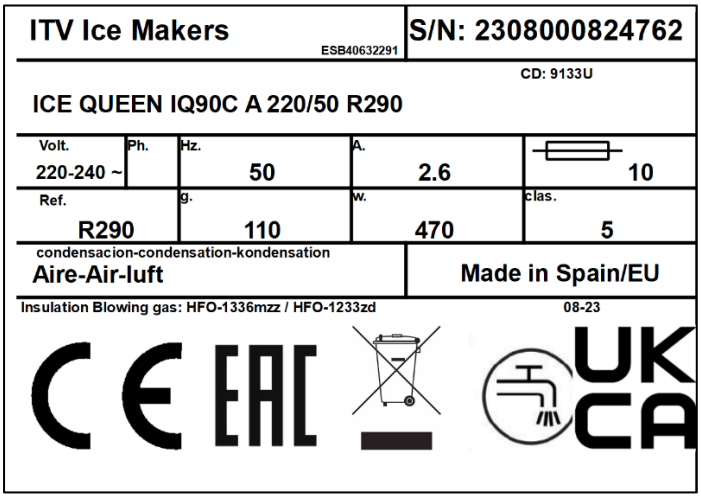

Check that the installation kit inside the machine is complete and includes:

- Shovel
- ¾ inch water inlet hose
- 22mm drain hose
- Filter gasket
- User manual
- Warranty

CAUTION: All packaging elements (plastic bags, cardboard boxes and wooden pallets) must be kept out of the reach of children, as they are a source of potential danger.

2. INSTALLATION

2.1. ICE MACHINE LOCATION

This ice maker is not designed to be used outdoors. The ice maker should not be located next to ovens, grills, or other equipment that produces a lot of heat.

Compact CD machines are designed to operate at ambient temperatures between 10ºC and 43ºC (50ºF and 109ºF) and inlet water temperatures between 5ºC and 35ºC (41ºF and 95ºF).

Below the minimum temperatures there may be some difficulties in making the ice flakes. Above the maximum temperature, compressor life is shortened and output is substantially lower.

Airflow on compact air-cooled machines enters through the front grille, entering the right front, and exiting the left front and rear. In addition, the unit is equipped with a rear ventilation grill. Do not obstruct the front grill with any object.

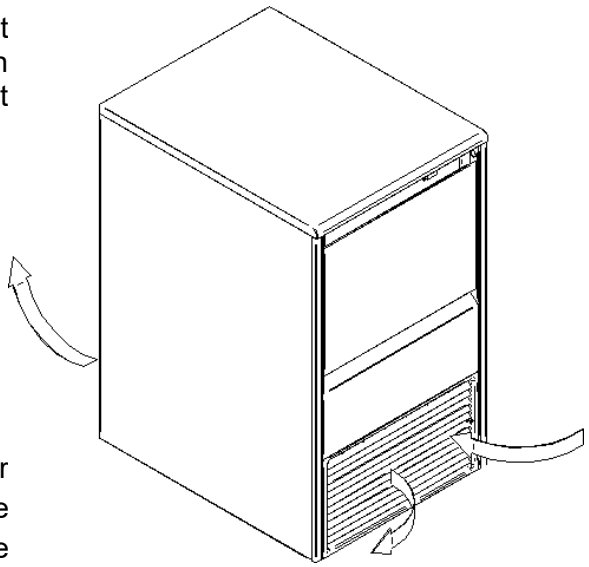

The unit can run recessed, but with reduced output.

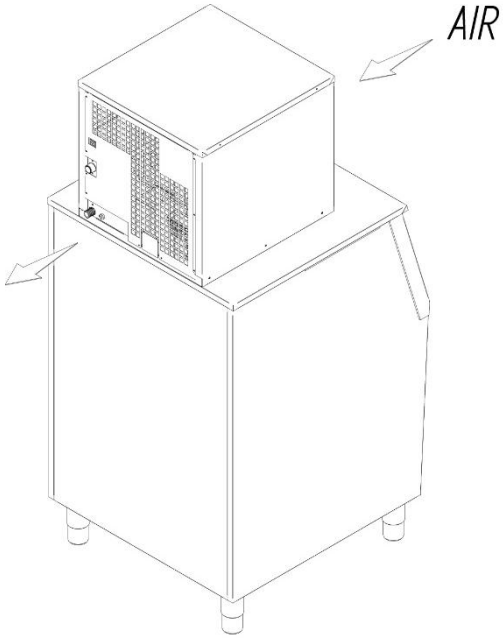

For modular units, the position that the airflow should flow through the rear should be taken into account. Do not place objects behind or in front of the front grill.

If the frontal ventilation is not sufficient, the outlet is totally or partially obstructed or due to its location it receives hot air from another appliance, we recommend, if it is not possible to change the location of the machine, INSTALLING A CONDENSED MACHINE BY WATER.

IT IS IMPORTANT THAT THE WATER PIPES DO NOT PASS NEAR HEAT SOURCES SO AS NOT TO LOSE ICE PRODUCTION.

The location should allow sufficient clearance for the water, drain, and electrical connections at the rear of the icemaker.

2.2. ICE MACHINE LEVELING

Use a level on the top of the ice maker to ensure the equipment is perfectly level.

Screw the leveling feet into the bottom of the ice maker as far as they will go. Place the machine in its final position.

Use a level on top of the ice maker. Adjust each leg as necessary to level the ice maker from front to back and side to side.

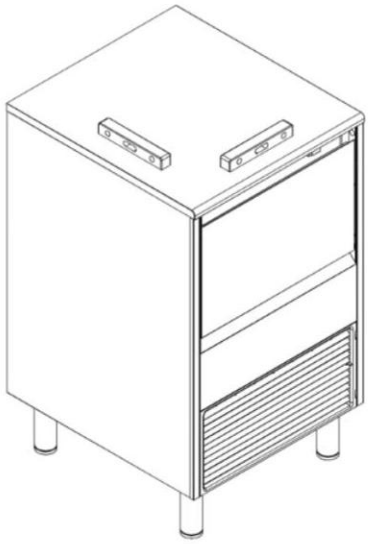

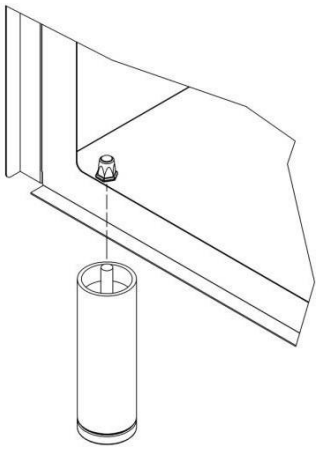

In modular machines, it must be leveled by adjusting the depósito legs.

2.4. MINIMUM DISTANCE TO OBSTACLES

See below for recommended minimum distances for proper operation and efficient service.

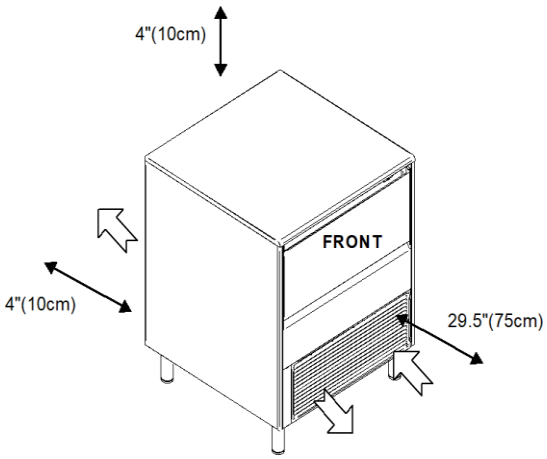

Compacta

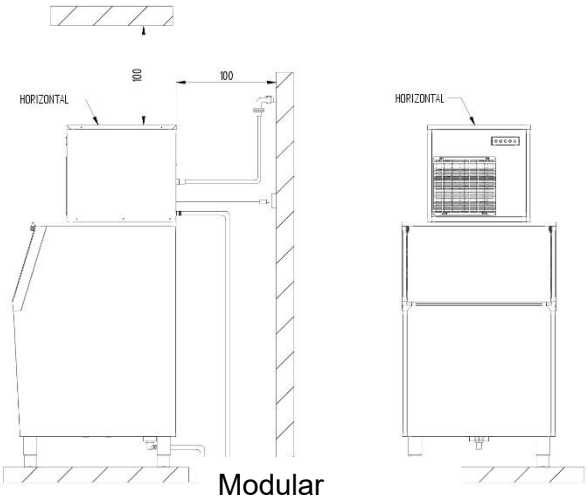

Modular

Connection diagram:

The location should allow sufficient clearance for water drainage and electrical connections at the rear of the ice machine.

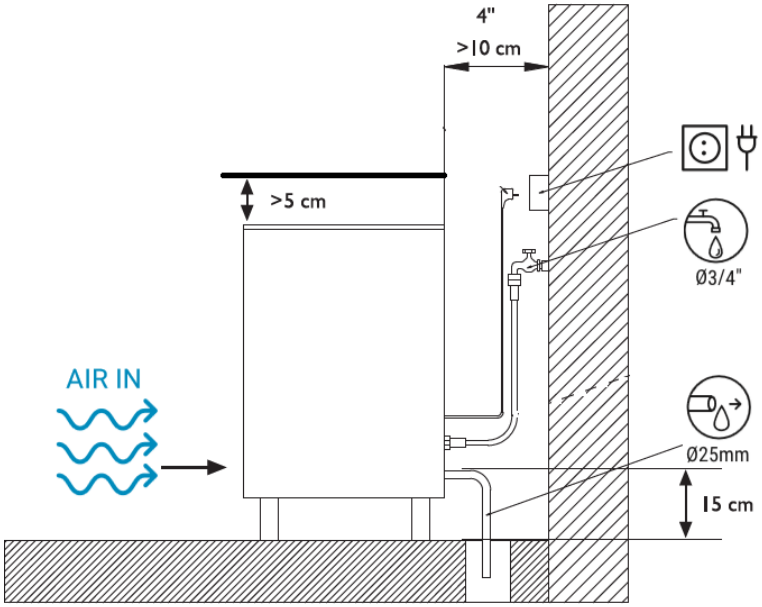

2.5. WATER SUPPLY CONNECTION

The quality of the water supplied to the ice maker will influence the time between cleanings and ultimately the life of the product (mainly on water-cooled units). It will also have a notable influence on the appearance, hardness and flavor of the ice.

Local water conditions may require water treatment to inhibit scale formation and improve flavor and clarity. If you are installing a water filtration system, refer to the installation instructions supplied with the filtration system.

The pressure must be between 0.1MPa and 0.6MPa (1 and 6 bar). If the pressure exceeds these values, install a pressure regulator.

The water connection must be dedicated (only equipment hooked to the water line).

ATTENTION: The machine must be connected to the pipeline with adequate backflow protection in accordance with current national and local regulations.

2.6. DRAIN CONNECTION

2.6.1. GRAVITY DRAINAGE

The drain must be located lower than the level of the machine, at least 150mm.

It is advisable that the drain hose be 30mm in inner diameter and with a minimum slope of 3cm/meter.

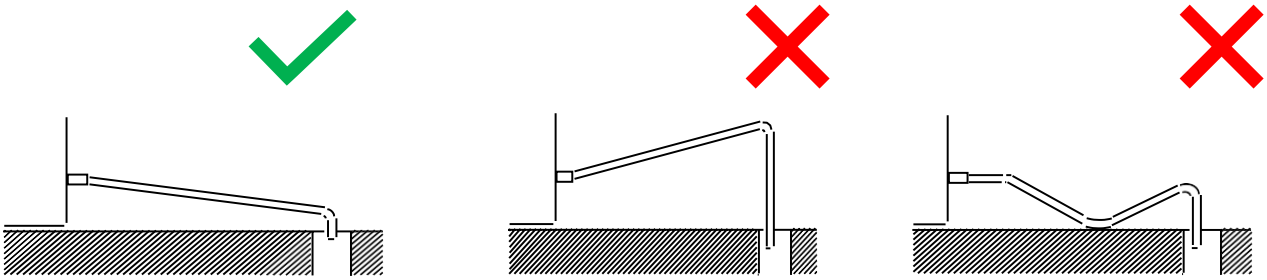

2.6.2. DRAIN CONNECTION BY PUMP

This option only applies to compact machines.

This pump drain version allows a machine installation in which the drain can be located 30 meters horizontally and 1.5 meters high from the machine's water outlet.

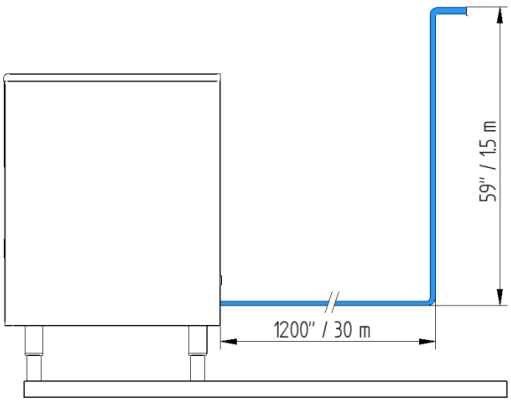

If the drain pipe runs incorrectly, the pump may not be able to evacuate the water, since the pump flow rate may be influenced by the existence of air stored within the circuit.

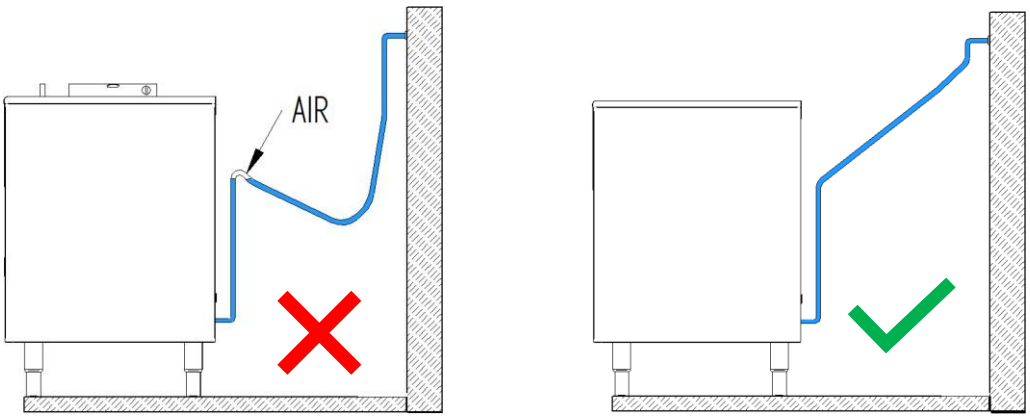

2.7. ELECTRIC CONNECTION

- It is mandatory to connect the equipment to ground. To avoid possible electric shock to persons or damage to the equipment, the machine must be grounded in accordance with local and/or national regulations, as applicable.
- The manufacturer disclaims any responsibility in the event that damage occurs due to the lack of ground installation.
- If the power cable is damaged, it must be replaced with a special mounting cable that will be supplied by the manufacturer or by the after-sales service. This replacement must be carried out only by a qualified technical service.
- The machine should be positioned so that there is a minimum of space between the back and the wall to allow easy and safe access to the cord plug.
- It is advisable to install a remote switch to completely disconnect the machine.
- Protect the outlet. Install appropriate switches, fuses and differential protector.

ATTENTION: The device requires an independent power supply of adequate capacity. Consult the electrical specifications on the nameplate. Failure to use a separate power supply of adequate capacity may result in damage to internal components or wiring. This could cause heat generation or fire.

The voltage is indicated on the nameplate and in the technical specifications section of this manual. A voltage variation greater than 10% indicated on the nameplate may cause damage or prevent the machine from starting.

3. *PRIOR CONTROL AND START-UP*

3.1. PRIOR CHECK

a) Is the machine level?
b) Do the voltage and frequency match those on the nameplate?
c) Are the drains connected and working?
d) Are the ambient temperature and water temperature maintained in the following range?

	ATMOSPHERE	WATER
MAXIMUM	43ºC/109.4ºF	35ºC/95ºF
MINIMUM	10ºC/50.0ºF	5ºC/41ºF

e) Is the water pressure adequate?

MINIMUM	0.1MPa (1 bar)
MAXIMUM	0.6 MPa (6 bar)

f) The conductivity of the water must be at least 10 microSiemens

NOTE: In case the inlet water pressure is greater than 6 bar, install a pressure reducer.

3.2. ASSEMBLY OF THE DISPERSION CONE

This accessory distributes the ice in the depósitos, and prevents it from caking under the outlet tube. By varying your position you can direct the ice in any direction.

Anchor to the bottom of the bin cap.

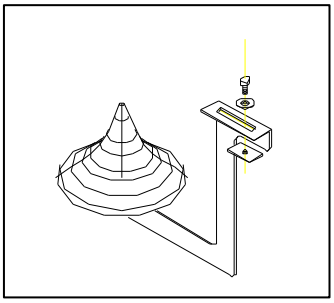

3.3. START UP

Once installation instructions have been followed (ventilation, site conditions, temperatures, water quality, etc.), proceed as follows:

1. Open the water inlet. Check for leaks.

2. Connect the machine to the power source. Turn on the power switch

•Modular machines at the rear

▪Compact machines on the side of the electrical panel accessing through the door. We can manipulate the switch by opening the door and with our hand accessing the upper left part of the interior of the machine.

WARNING: this switch does not disconnect all the voltage inside the machine. Disconnect from the mains before handling.

1. The button on the control panel, , will be red (stand-by mode), and when you press it, it will flash blue for 10 minutes.
2. After 10 minutes of the timer, the machine will start and remain with a fixed blue light.
3. Check that there are no rubbing or vibrating elements.
4. Check that it produces ice correctly. *It is normal for some water to fall instead of ice in the first few moments.
5. Check that there is no alarm on the control panel. If so, restart the machine. If it persists, see "Troubleshooting Guide" section.

Damage due to lack of maintenance and cleaning operations is not included in the warranty.

4. CONTROL DISPLAY

The outer panel is located on the front of the machine in the upper left corner and has 5 buttons:

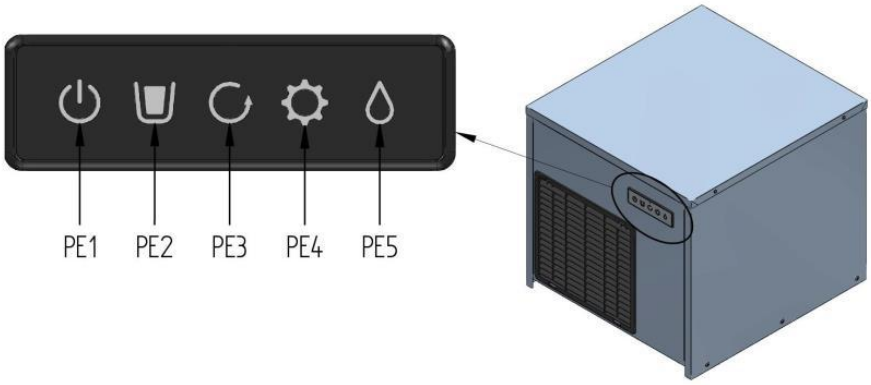

Icon	Description	Color	Symbol
ON/OFF	ON/OFF button + two-colour LED. • Push button to turn the machine on: the blue LED indicates that the machine is ON (it can be on timer, producing ice or stopped). • Button for switching off the machine: the red LED indicates that the machine is "OFF" but connected to the mains (Stand-by). • Push button for the restart function • Push button for gearmotor only function. • Error reader (blue+red)	Blue and red	PE 1
Stock	Indicates: • Stop for filling the ice store	Green	PE2
Maintenance	Indicates: • The machine requires a cleaning cycle. This indicator will activate every 6 months. The machine can continue producing ice, but the warning will remain active until a complete maintenance cycle has been performed.	Red	PE3
Pressure switch/ Outlet safety	Indicates: • Safety shutdown due to high pressure switch • Shutdown due to lack of water consumption • Stop due to thermal protector pt of the geared motor • Shutdown due to ice outlet blockage	Red	PE4
Water	Indicates: • Water level failure • Water draining in the cleaning cycle	Red	PE5

5. DESCRIPCIÓN DE COMPONENTES

5.1 EQUIPO DE REFRIGERACIÓN

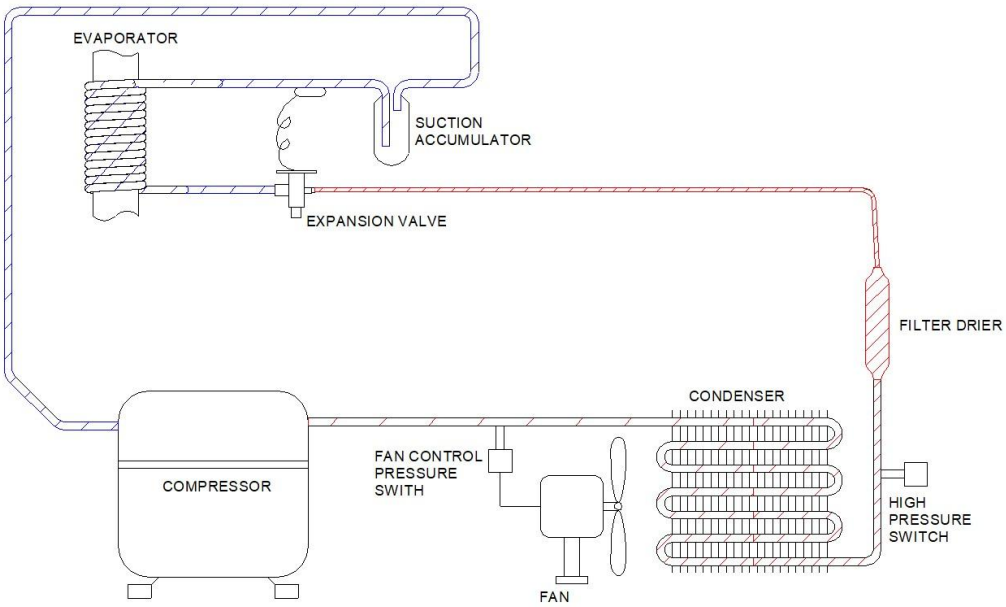

It consists of the following components:

- Compressor.
- Condenser. Air or water.
- Evaporator. Vertical tube with cooling jacket. They are kept filled with water and, inside, a worm screw scrapes and removes the ice that forms.
- Thermostatic expansion valve (capillary in smaller models).
- Dehydrator
- Safety pressure switch (high pressure). Stops the machine, in case a pressure higher than this value is reached:
    - R290 → OFF 25 bar (362 psi)
- Condensing pressure switch. Controls the fan (air condensation) or valve (water condensation) to keep the high pressure at the stipulated level:
    - R290 → OFF11.5 - ON13.5 bar (167- 196 psi).

5.2 HYDRAULIC EQUIPMENT

- **Water inlet valve.** Controlled by the control board; supplies water from the tank.
- **Water tank/basin.** Maintains the water level inside the evaporator using the communicating vessels principle. Stainless steel electrodes signal the control board to maintain the internal level. An overflow allows drainage to prevent internal spillage in case of malfunction and serves as a drain plug for the tank.
- **Evaporator feed pipe.** Connects the water tank to the evaporator. Diverts to a drain valve that allows the system to be drained.
- **Discharge pipe.** Carries the ice from the evaporator outlet to the ice box.
- **Solenoid drain valve (for compact machines only):** Controlled by the control board; supplies water from the tank..

5.2.1 Hydraulic system compact machine

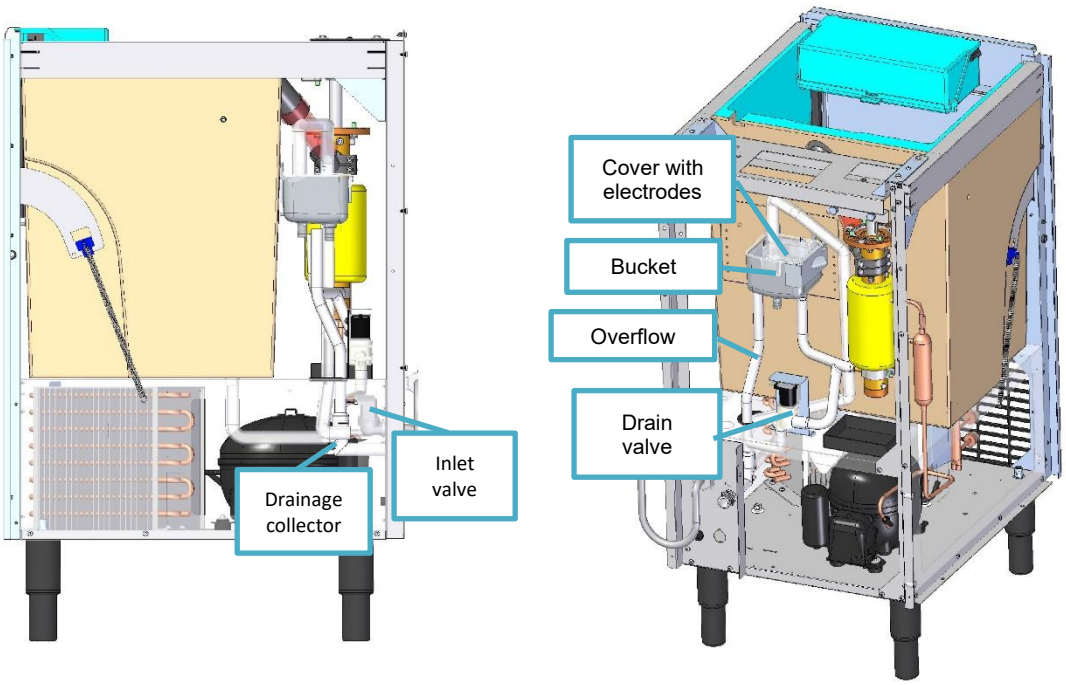

5.2.2 Modular machine hydraulics

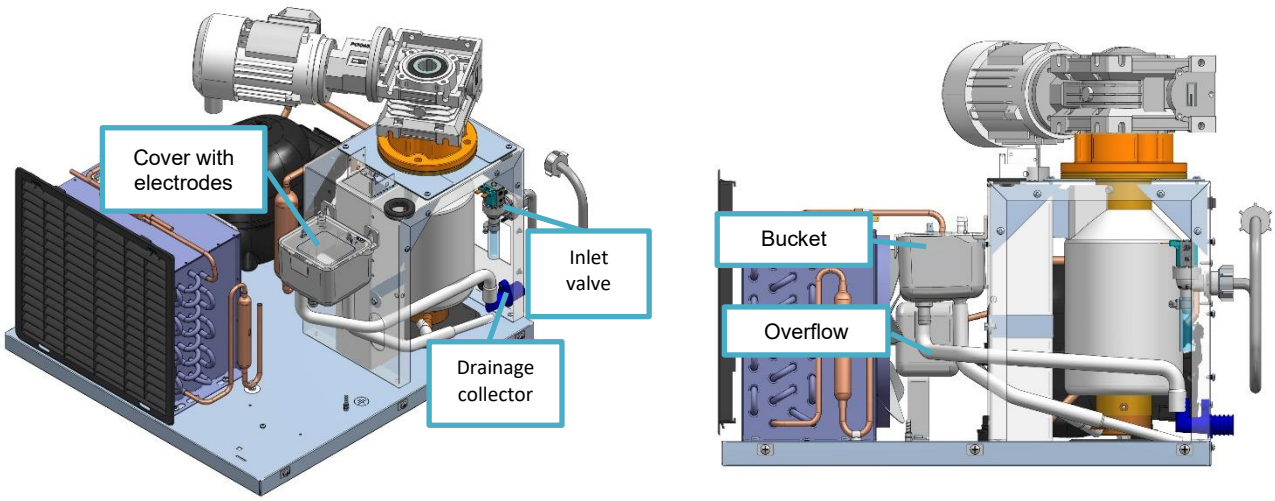

5.2.3. Drainage by pump (only for compacts)

While the machine is on, there is water that needs to be evacuated:

- melt water from the ice melting in the ice bin.
- water from the drain valve that empties the system.
- water from the possible outlet of the safety overflow.

When the water tank is full of water covering the 2 electrodes (#5), the pump (#6) is switched on and evacuates the water for 5 seconds. After 5 seconds, the pump switches off if the electrodes are not covered by water, otherwise the pump starts again for 5 seconds.

There is a non-return valve at the discharge outlet of the pump which prevents the backflow of water in the piping when the pump is stopped.

Should the system fail to operate for any reason, the water will flood the ice box. There is a vent pipe (#7) that allows the system to remove any air that may remain in the water tank. The vent tube should always be above the front door opening (#8).

If the pump runs continuously for 5 minutes, it will automatically stop for 5 seconds to cool down..

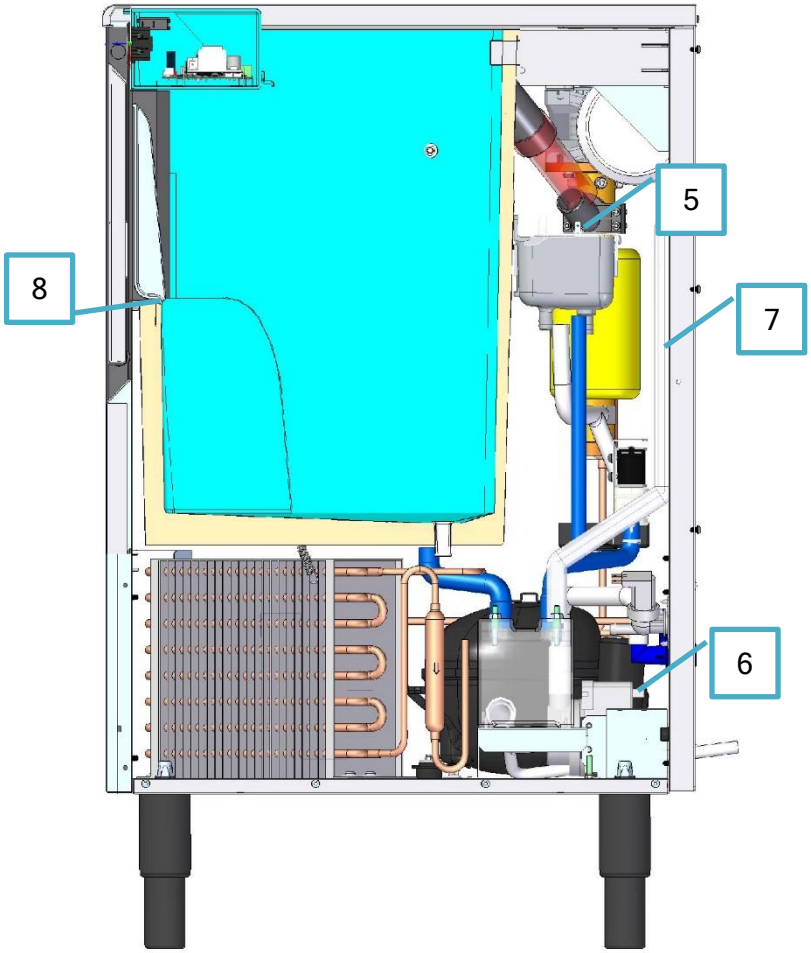

5.2.4 Water level control

The water level control system is carried out directly by the conductivity signal at the short electrode LW. Two electrodes of different lengths (as shown in the illustration below) are placed in the water tank, from which an analogue conductivity signal (LW) is generated once the water reaches the short electrode.

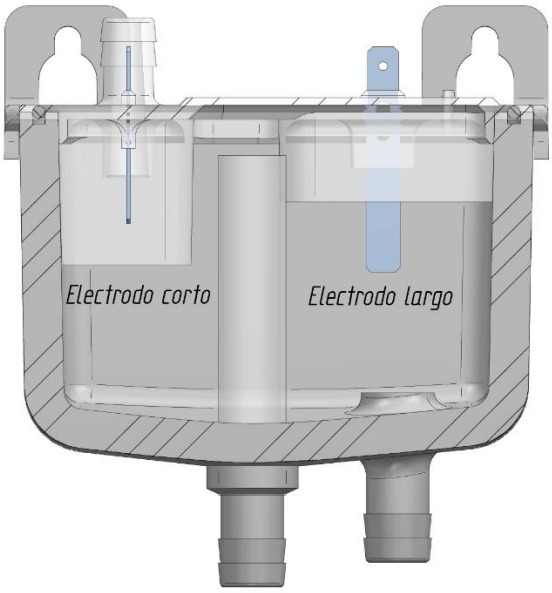

It works as follows:

As soon as the water level is below the short electrode, the control board will count a delay time of 5 seconds to close the EW relay corresponding to the solenoid valve. After this time has elapsed, the solenoid valve shall open and fill the hydraulic circuit until the LW signal is present again.

The solenoid valve shall not operate for more than 90 seconds, which is the maximum consecutive operating time of the water inlet solenoid valve. If this happens, the machine will enter the alarm stop state due to lack of water as explained below under the point "Stop due to lack of water level".

5.3 ELECTRICAL EQUIPMENT

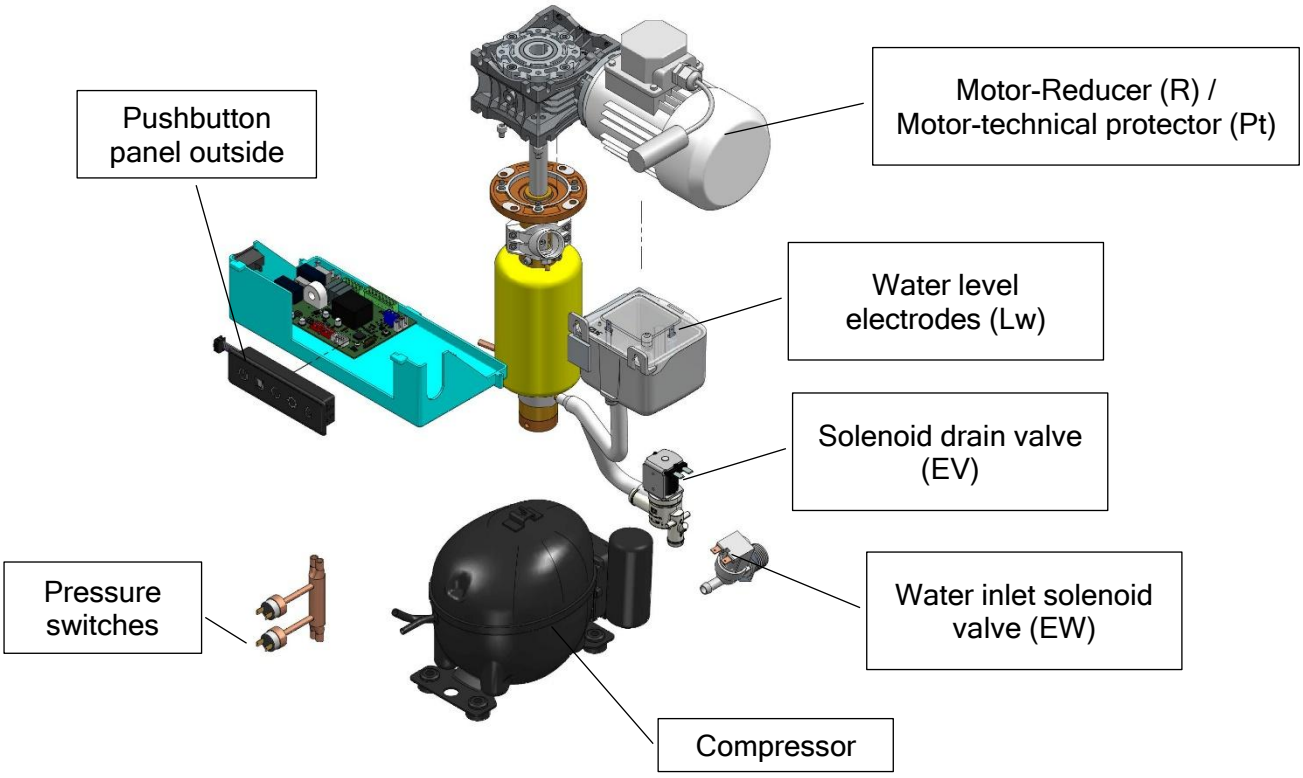

- Geared motor (R): is a mechanical assembly consisting of an electric motor coupled to a speed reducer. They reduce the input speed and multiply the torque based on the gear ratio "i".
- Water level electrodes (Lw) When the fluid reaches the two electrodes, they indicate to the plate that the tank is full. The conductivity of the water must be less than 10 µsi.
- Button panel exterior: Located on the front of the machine, it has the power button and indicator lights.
- Electronic board (PCB control) : Control board that receives input signals, manages them and returns outputs, normally by activating relays.
- Solenoid drain valve (EV): Allows the hydraulic circuit to be drained.
- Water inlet solenoid valve (EW): Maintains the water level in the evaporator feed tank.
- Safety pressure switch (Pt): In the event of reaching the set pressure (25 bar), it stops the machine completely and sets it in alarm.
- Condensin pressure switch (Pc) : Starts or stops the fan or water inlet to maintain the set high pressure.

5.4. SINGLE PHASE ELECTRONIC BOARD

CONMPACT MACHINE WITH NTC

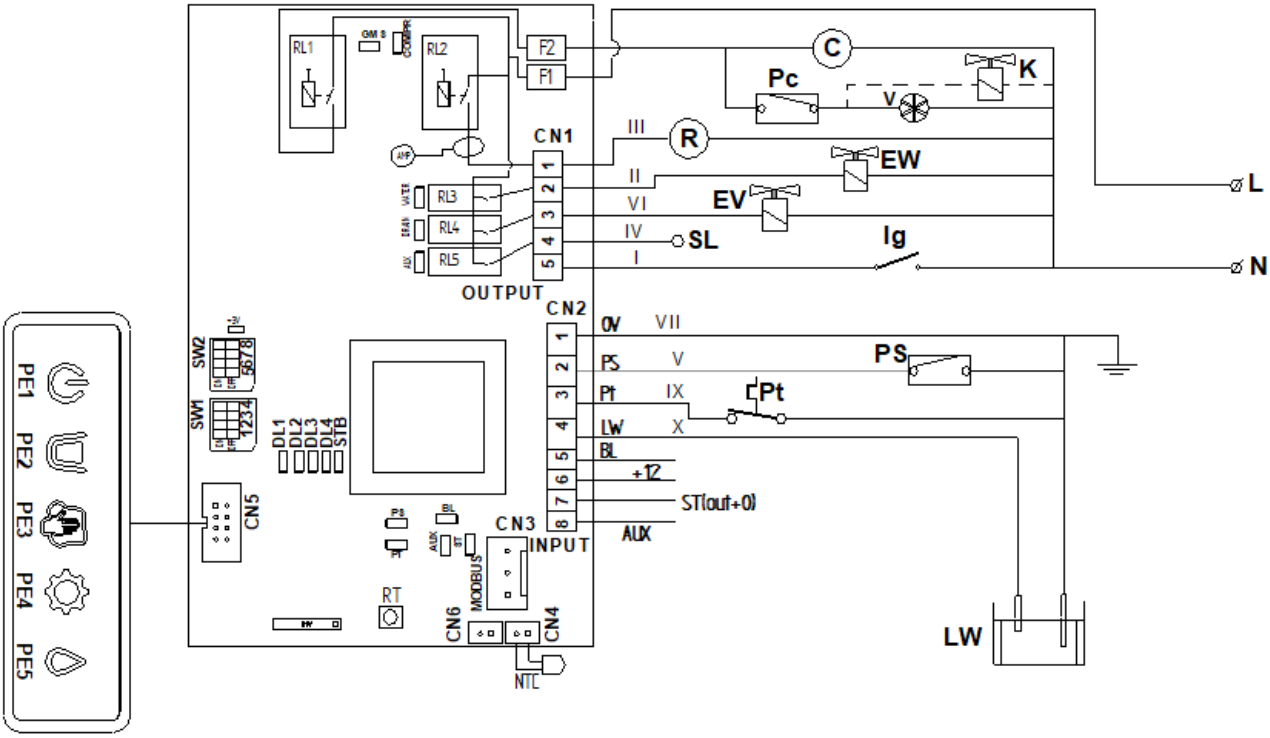

MODULAR MACHINE with variator

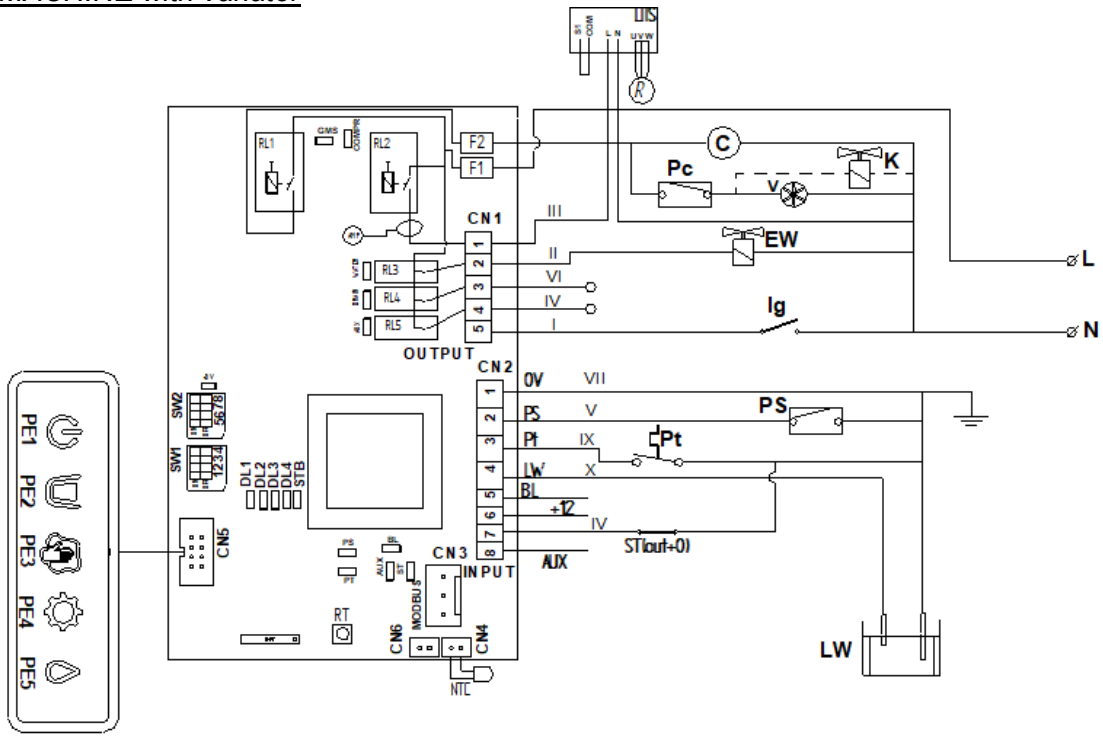

MODULAR MACHINE with ST stop

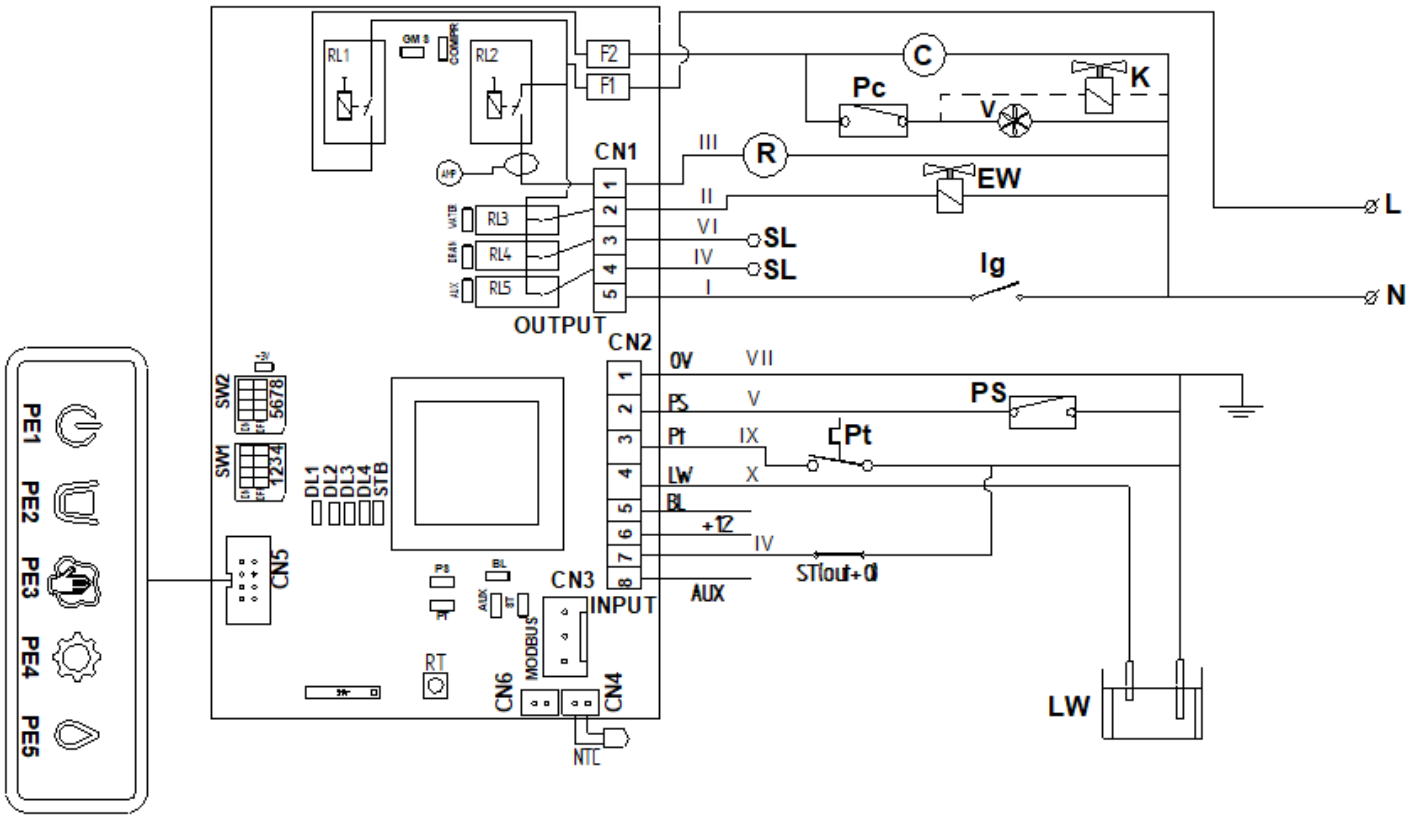

5.4.1 Inlets

Symbol	Description
Ps	Safety pressure switch
Pt	Reducing thermal protector.
LW	Water level in the bucket
BL	Safety entrance (ice outlet lock).
ST +12	Stop stock sensor NPN 12Vdc.
Aux	auxiliary digital input
RT	Internal button on the plate

5.4.2 Outlets

Symbol	Description
C	Compressor
R	Gear motor
EW	Water inlet valve
EV	Drain valve
SL	Free auxiliary connector

5.4.3 Signaling LEDs

The following tables describe the signals provided by the different LEDs on the control board. Whenever there is voltage there must be a green indicator LED (STB) active voltage of 5V.

5.4.3.1 Input LEDs

The input LEDs are positioned next to each of their corresponding inputs. Green LED color with active signal.

5.4.3.2 Output LEDs

The output LEDs are positioned next to their corresponding relays. Orange LED color with active signal.

5.4.3.3 Status LEDs. Normal work (fixed LEDs)

The status LEDs serve as indicators on the control board of both the normal operation of the machine and the alarm states that can be generated:

- DL1→ Start delay
- DL2→Working
- DL3→ Stock full stop
- DL4→ Stock full

The following table shows the operation of the 4 LEDs for this effect: DL1, DL2, DL3 and DL4 in normal working mode. In these cases, the LEDs turn on with a steady light, without flashing:

Steady red LED	DL1	DL2	DL3	DL4
Machine on: start timing until the compressor starts	X			
Machine running: compressor running		X		
Full warehouse stop timing			X	
Sign that stock is full				X

5.4.3.4 Status LEDs. Alarm (flashing LEDs)

The following table defines the alarm states of the machine, which can be differentiated with the following flashing of the status LEDs:

Intermittents	Flashing red LED	DL1	DL2	DL3	DL4	DL1+2
Reducer current R	Below the lower limit		1			
	Above the upper limit		2			
NTC	open					2
	Short					1
Water	Lack of water level				1	
	Lack of water consumption				2	
High pressure switch (PS)	Failed	1				
BL ice outlet	Blocking			1		
Reducer technical protector (pt)	Failed		3			
Reverse pase sequence	Reverse gear motor rotation			2		

1-2-3: number of flashes

5.4.4 Setting the DIP switches

The following table describes the functionality of the micro-switches that the table has, that is, the work options that the combinations of these can provide:

DIP Switches	Description
S1-ON	Timed stop
OFF	Instant stop without delay
S2-3	Stock stop configuration
S4	Free
S5-6-7	Motor - reducer current limit configuration
S8	Activation of maintenance cycle alert

The following table shows the default intensity configuration in each of the possible combinations allowed by the switches on the control board (S5, S6 and S7).

Nº valor	SWITCH			Intervalo de Intensidad (A)	Modelo
	S5	S6	S7		
1	Off	Off	Off	0,2 – 1	-
2	On	Off	Off	0,5 – 1,2	IQ50-90 (220V/60Hz) IQ180-230 (220V/60Hz)
3	Off	On	Off	0,8 – 1,8	-
4	Off	Off	On	1 – 2,1	IQ50-90 (220V/50Hz) IQ180-230 (220V/50Hz)
5	Off	On	On	1,2 – 2,3	-
6	On	Off	On	1,8 – 3,5	-
7	On	On	Off	2,4 – 4,5	IQ50-90 (115V/60Hz) IQ180-230 (115V/60Hz)
8	On	On	On	0,3 – 6	IQ400-600 (I)

The following table shows the machine stop configuration due to temperature:

SWITCH		Temperature °C
S2	S3	
off	off	Nulo
off	On	2
On	off	5*
On	On	8

* Factory settings

5.4.5 Functions of the internal button on the plate (RT).

During start-up: when you press cut, the initial delay is reduced.

- On compact machines, it will go directly to the evaporator emptying and filling sequence, and the start-up process will begin.

- On the other hand, in modular machines, the timing will be reduced to two minutes and the machine will start.

5.5 THREE-PHASE ELECTRONIC BOARD

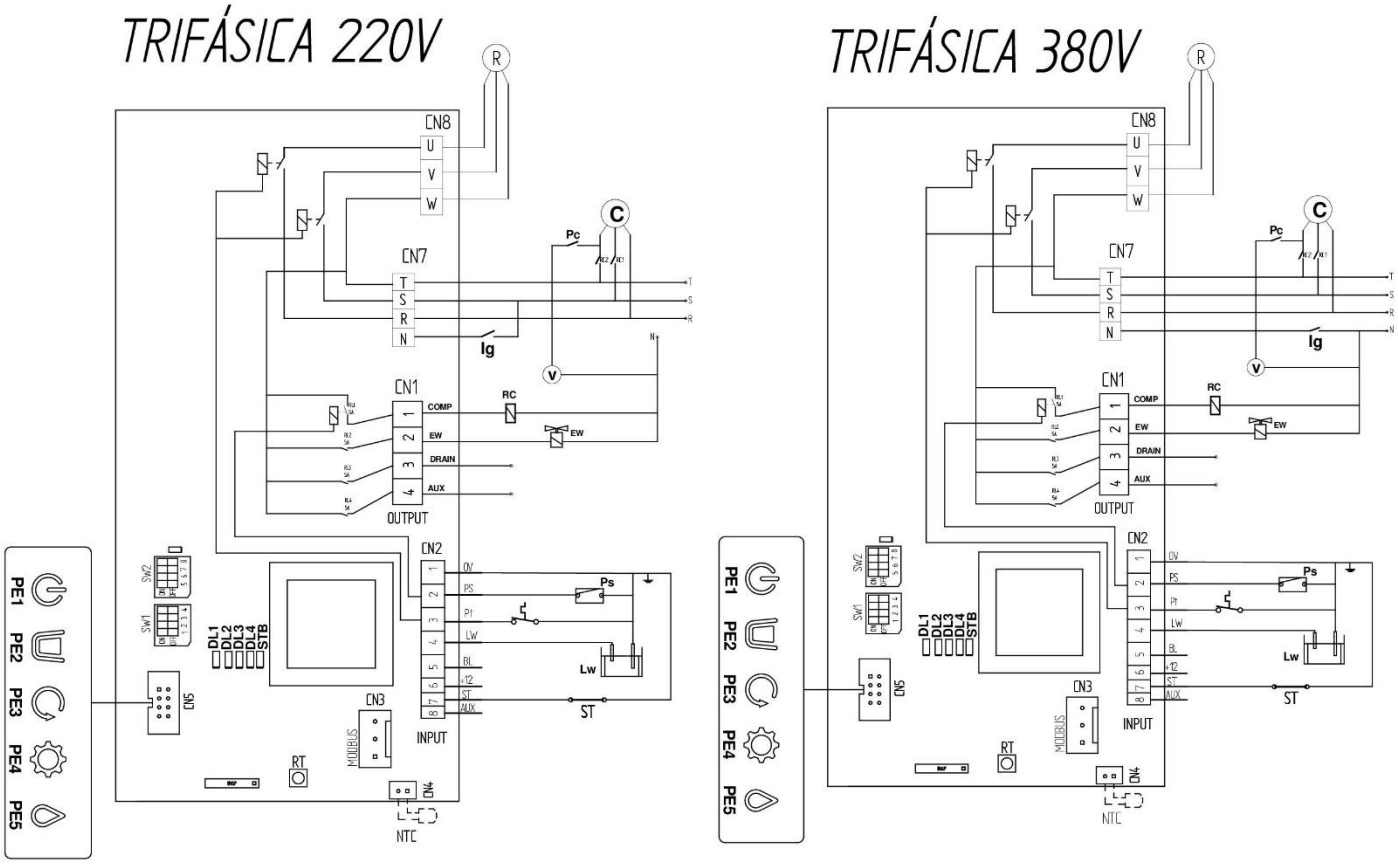

In addition to the errors explained in the single-phase board section, there are also phase sequence errors.

5.6 ELECTRONIC BOARD FOR DRAINAGE BY PUMP.

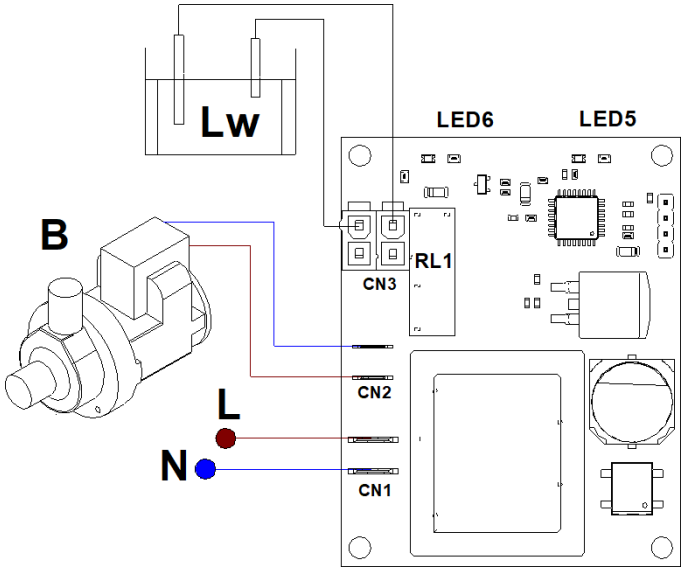

PCB conexiones	
Salidas	
B	Bomba de agua
Entradas	
Lw	Sensor de nivel de agua

LED signage

There are two LEDs that indicate the status of the machine.

Status signaling. Continuous LED	LED5	LED6
Pump running	X	
Water level sensor on		X

5.7 MODBUS

Modbus is an open communication protocol, used to transmit information over serial networks between electronic devices. The device that requests the information is called the Modbus master and the devices that supply the information are the Modbus slaves.

For its physical connection, it must be connected to CN4 and CN6 of the electronic board. The outputs that Modbus will give us are the following:

ADDRESS	MEANING	ADDRESS	MEANING
0	firmware revision: major * 256 + minor	13	NTC ADC value (0-4095)
1	machine ON	14	NTC volt value (0.1V)
2	machine blocked	15	NTC temperature status (see table)
3	machine status (see table)	16	motor current (0.001A)
4	EV filling	17	motor current ADC value (0-4095)
5	EV drain	18	motor current volt value (0.1V)
6	motor	19	dip switch bit mask [sw2-4 …… Sw1-1]
7	compressor	20	active alarm code (see table)
8	aux out	21	history alarm 1
9	water level status (see table)	22	history alarm 2
10	water ADC value (0-4095)	23	history alarm 3
11	water volt value (0.1V)		
12	NTC temperature (0.1°)[SIGNED INT 16 VALUE]		

MACHINE STATUS		WATER LEVEL STATUS		ALARM CODE		NTC TEMPERATURE STATUS	
VALUE	MEANING	VALUE	MEANING	VALUE	MEANING	VALUE	MEANING
0	boot	0	water level undefined	1	ice full	0	probe error
1	start Up	1	water level ok	2	pressure	1	temperature over threshold
2	ice making	2	water level low	3	ice blocked	2	temperature below threshold
3	washing			4	motor overtemp		
4	blocked			5	motor current low		
				6	motor current high		
				7	water level		
				8	water consumption		

6. OPERATION SEQUENCE

1. When powering the machine with the mains switch (see point 3.3).

   The machine switches to stand-by mode with the button in red.
2. When pressed, the machine will time out for 10 minutes with the button flashing in blue.
3. After 9 minutes the gearbox starts and the following minute the refrigeration equipment starts.
4. During the start-up time, the entire hydraulic circuit is filled with water up to the level of the electrodes in the tank.
5. In compact models, during this time it opens the drain valve, empties the circuit and refills it twice.
6. The water in contact with the evaporator walls freezes, and the ice that forms is scraped off by the SPINDLE (endless) which also pushes it upwards, forcing it out of the mouth and falling into the tank.
7. When it (the tank) is full, the machine stops and signals it on the display icon.
   a. In the compact models, the filling stop will be made by means of an NTC probe inside a stainless steel tube placed in the upper part of the stock tank. It will switch on again when it detects that the ice level has dropped and the probe temperature rises (with the setting defined with switches S2-S3).
   b. In modular models, when the ice reaches and fills the outlet pipe, the mechanical stop rocker actuates and the machine goes to the ice-full state until the ice is removed and the rocker returns to its original position, starting the machine again.
8. Shutdown due to filling of ice storage:
   a. On compact machines (switch S1 ON), the compressor stops instantly and the gearbox continues to run for 3 minutes.
   b. In modular machines (switch S1 OFF), the gearbox and compressor stop instantly.
9. During production, the water level in the tank is kept constant in order to feed the water to the evaporator through communicating vessels. The water tank has two electrodes so that, when the upper one does not detect water, it activates the solenoid valve, which will close when the electrode level is reached. In this way an ON-OFF cycle keeps the level constant.

7- ALARMS

They detect malfunctions. These are indicated by flashing status LEDs DL1-4.

For some alarms, a second retry attempt is made and if it is repeated again, the machine stops. If the second retry attempt is successful, the signaling is turned off.

In case the machine stop was caused by an alarm, the resetting is done by turning the main switch off and on.

7.1 High pressure safety switch

If the pressure switch is actuated (contacts open), the control board input (Ps) opens, generating this shutdown state. At this moment, all the outputs of the control board are opened.

When the Ps pressure switch contact is closed again, the machine will start with the start-up timing sequence. Minimum stop time 30 min unless a restart is done manually.

Signaling:

- Internal LED LE1 flashing.
- External panel PE4 pilot light fixed on.

7.2 Geared motor alarms

7.2.1 Temperature shutdown of the geared motor

In case of temperature higher than that of the electric motor thermal protector, the control board input is opened by the motor thermal protector (Tp), generating this machine stop state until a manual restart is performed.

Signaling:

- LE2 board LED intermittent triple flashing
- External panel PE4 pilot light fixed on.

7.2.2 Stop of the geared motor due to current below the lower limit

If the measured current value of the geared motor R is below the lower limit of the range specified in the switch setting table (section 5.4.4) for a time of 5 consecutive seconds, the machine stops until a restart is performed manually.

Signaling:

- LE2 board LED single blinking
- External panel PE4 pilot light fixed on

7.2.3 Stop of the geared motor due to current above the upper limit

If the measured current value of the geared motor R is above the upper limit of the range specified in the switch setting table (section 5.4.4) for a time of 5 consecutive seconds, the machine stops.

Signaling:

- LE2 board LED double blinking
- External panel PE4 pilot light fixed on

The machine will make 2 retries every 30 min to start up with a timeout between them, and if the alarm occurs 3 consecutive times, the machine will stop completely.
This stop status with its corresponding LED signals will remain unchanged until the machine is restarted (by means of the internal pushbutton Rt or PE1) or switched off and on again.
If on the second or third attempt the machine operates normally and this higher current value alarm does not occur after the 1 hour time has elapsed, the counter for the number of repetitions of this alarm will be reset to zero and the machine will continue to run normally.

7.3 Shutdown due to low water level

This alarm occurs when the water inlet valve is open for 90 seconds and the electrodes do not detect filling of the tank, causing the machine to stop.

The main reasons for this alarm are:

- Lack of water supply
- Internal leak in the circuit
- Fault in the inlet solenoid valve

When the alarm is triggered, every 30 min it will make a filling attempt again. So when the water supply returns, the machine will start making ice.

Signaling:

- LED LE4 board flashing
- External panel PE5 pilot light fixed on

7.4 Shutdown due to lack of water consumption

This stop occurs when, after 2 minutes, the machine does not consume water and therefore the water inlet solenoid valve is not activated.
All outputs are set to OFF except the gear motor, which continues to run for 10 minutes. In this way we detect that ice is not being produced and there is an anomaly (during the initial 20 min of start-up this alarm is not considered).

After 30 min from the alarm, it restarts and if the alarm occurs again, the machine is permanently stopped.

Signaling:

- LE4 board LED double flashing
- External panel PE4 pilot light fixed on

7.5 NTC sensor alarm

Only on compact machines that operate with temperature probe magazine control.

Two types of faults are detected:

- Probe shorted
- Probe not connected or open

Signaling:

- External panel PE4 pilot light fixed on
- Internal:
  - Probe not connected or open: LED1+2 with 2 flashing lights.
  - Probe short-circuited: LED1+2 with 1 flashing light

7.6 Blocking alarm

It is not used as standard on the machine, but it can be wired for any external alarm that you want to manage. The machine stops completely until it is reset with the following signalization:

- Single flashing LE3 board LED
- External panel PE4 pilot light fixed on

7.7 Shutdown by phase sequence

It occurs when the connections of the extension cord to the plug are reversed in phase. Once the gearmotor starts and rotates in the opposite direction to the working direction, the machine will signal phase sequence error. Once the geared motor is started, after a few seconds, if it rotates in the opposite direction to the working direction, the machine will indicate the error on the display by flashing PE3+PE4+PE5.
On the board we will recognize the error by the LED3 with two flashing lights.

This stop state with its corresponding LED signals will remain unchanged until the machine is restarted or switched off and on again.

7.8 Operation of alarm history

It will be possible to consult the history of the last 3 alarms that the machine has had, signaling LED1, LED2, LED3 and LED4 with the corresponding flashing of each alarm.

Activation: when the machine is switched off Power off is activated by holding down the internal pushbutton on the Rt board and switching on the machine Power on. The machine remains at standstill and only the signaling is shown on the board **(external signal PE1 in steady red).**

Signaling: the last alarm will be displayed first, a short press on the Rt pushbutton will display the second to last alarm, and a further short press will display the second to last alarm. This sequence will be repeated successively with each press. As an aid, to know which alarm is being displayed, **PE1 in purple color**, will light up, with one flash for the last alarm, two flashes for the penultimate alarm and three flashes for the antepenultimate alarm.

Reset of alarms: pressing the internal pushbutton on the Rt board for more than 5 seconds resets the alarm history, turns off PE1 and switches the machine to Stand-by.

Automatic deactivation: after 10 minutes of inactivity, the alarm history is reset.

Manual deactivation: by POWER OFF.

8. MAINTENANCE AND CLEANING PROCEDURES

It is the responsibility of the user to maintain the ice machine and ice storage bin in a hygienic condition.

Ice machines also require occasional cleaning of their water systems with a specifically designed chemical. This chemical dissolves mineral buildup that forms during the ice making process.

Disinfect the ice storage bin as often as required by local sanitary codes, and each time the ice machine is cleaned and disinfected.

The ice machine water system should be cleaned and sanitized at least twice a year.

CAUTION: Do not mix ice machine cleaner and sanitizer solutions.

WARNING: Wear rubber gloves and safety glasses when handling ice machine cleaner or disinfectant.

WARNING: The unit should always be disconnected during maintenance/cleaning procedures.

RUBBER GLOVES AND SAFETY GOGGLES SHOULD BE WORN WHEN HANDLING ICE MACHINE CLEANER OR SANITIZER.

8.1 CLEANING OF AIR CONDENSER

1. Disconnect the power supply of the machine.
2. Close the water inlet valve or the faucet.
3. Clean with the aid of a vacuum cleaner, non-metallic brush or low-pressure air.
4. Open the water inlet valve or faucet.
5. Turn on the power supply to the machine.

8.2 CLEANING OF WATER CONDENSER

1. Disconnect the power supply of the machine.
2. Close the water inlet valve or faucet.
3. Disconnect the water inlet and outlet of the condenser.
4. Prepare the cleaning product Calklin or in its absence a 50% solution of phosphoric acid and distilled or demineralized water.
5. Circulate it through the condenser. The mixture is most effective between 35ºC and 40ºC.
6. Remove the product from the condenser and reconnect the water inlet and outlet.
7. Open the water inlet valve or tap.
8. Turn on the power supply to the machine.

8.3 CHANGE OF WATER FILTER

1. Disconnect the power supply of the machine.
2. Close the water inlet valve or the faucet.
3. Close the stopcocks located before and after the filter.
4. Remove the cartridge and install the new one.
5. Open the water inlet valve or faucet.
6. Turn on the power supply to the machine.

8.4 CLEANING CYCLE

In this operating mode of the machine, it is used to clean the hydraulic circuit (evaporator, tank and feed pipe). There is no cold generation and therefore the compressor will be deactivated during the whole cycle.

First of all, the water inlet tap must be closed. For emptying and cleaning, proceed as follows:

- In modular machines, the circuit should be emptied manually by removing the drain plug located on the lower bearing. Place a container to collect the water.
- In compact machines, the machine is emptied automatically by activating the EV drain solenoid valve for one minute to drain the water from the machine.

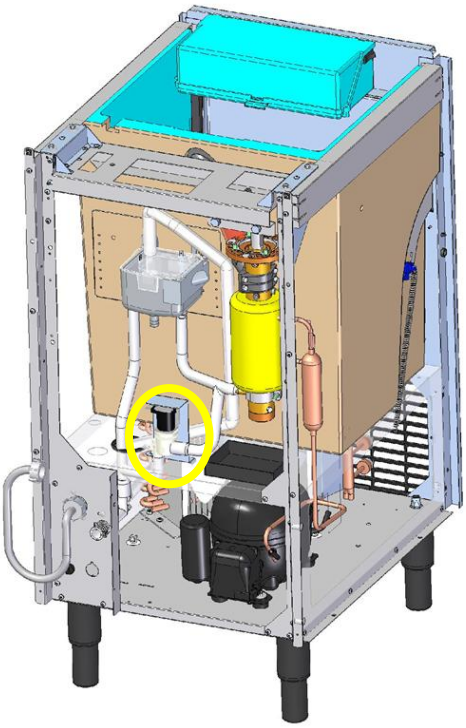

Compact machine

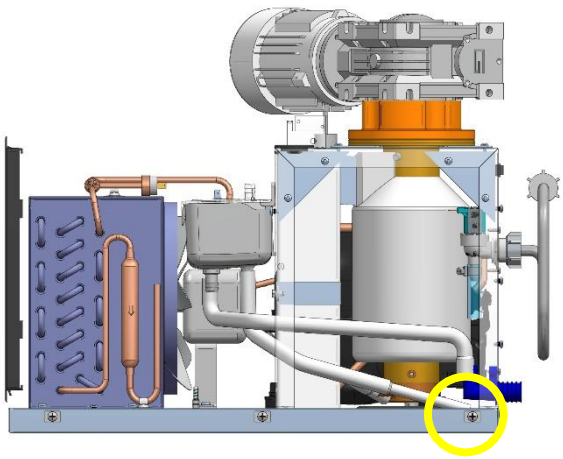

Modular machine

8.4.1 Decalcification process

First, close the water inlet tap and leave the machine in Stand-by (button **PE1 in red**), which is activated by pressing and holding the PE1 button on the display for 7 seconds.

When activated, it starts only the geared motor R for 30 minutes, during which time the user fills the bucket with the cleaner (50% phosphoric acid and water, or use an anti-scale cleaning product such as ICETECH's Calklin. Do not use salfumán or hydrochloric acid) and the circuit is cleaned.

During the 30 minutes, the 5 icons on the display board PE1 PE2 PE3 PE4 PE5 will dynamically light up one after the other from left to right and from right to left.

Once the 30 minutes have elapsed, the machine must be stopped and restarted (open the tap again). In the compact machines, the EV drain solenoid valve will make 3 water drains and in the modular machines, the drain must be made manually by removing the plug from the drain pipe.

Manual deactivation: Press and hold down the PE1 button on the display for more than 7 seconds to switch the machine to Stand-by.

With this process, the machine has been decalcified.

8.4.2 Disinfection process

Disinfectant solution: mix a solution of disinfectant using an agent approved for food equipment. It is recommended to use ICETECH's cleaning product or, failing that, sodium hypochlorite can be used to form a solution with 200 ppm of free chlorine, dilute 35 ml of this solution of 5.25% sodium hypochlorite (household bleach) with 10 liters of water.

Repeat the steps described in point "8.4.1 Decalcification process".

In compact machines, use this same solution to clean the inside of the stock tank.

IMPORTANT: Start the machine and discard the ice produced during the first 30 min.

8.7 MAINTENANCE TABLE

ACTION	MONTHLY	QUARTERLY	SEMESTERLY	ANNUAL	BIENNIAL	T UNIT
Cleaning air condenser						30 minutes
Cleaning water condenser						90 minutes
Descaling						45 minutes
Disinfection						30 minutes
Cleaning/exchange water filters						30 minutes
Exterior cleaning						--

Depending on the characteristics of the environment

Indispensable/Essential

Depending on water quality

Performed by owner

Maintenance and cleaning procedures, as well as problems resulting from their non-performance, **ARE NOT COVERED BY THE GUARANTEE.** Service personnel will bill you for travel expenses, time spent and materials required for maintenance and cleaning of the unit.

9. TROUBLESHOOTING GUIDE

9.1 GENERAL QUESTIONS

PROBLEMS	POSSIBLE CAUSES	SOLUTION
None of the electrical systems work. Front display off	No power.	Check power supply and connection
	Switch OFF Compact: side electrical panel Modular: rear part	Power on
	Display connector loosened	Check. Insert
PCB ALARMS **See section 7**		
Safety pressure switch	Dirty condenser	Clean the condenser
	Poorly positioned machine	Change location.
	Defective ventilator	Check. Replace
	Water machine: water valve broken	Check. Replace
	Defective safety pressure switch	Check. Replace
NTC probe error	Defective probe	Check. Replace
	Faulty probe plug connection	Check
Lack of water consumption	Poor cooling system performance	Check/replace
	Dirty electrodes/bucket	Clean electrodes/bucket
	Evaporator water inlet clogging	Check/clean
Low water level	Lack of water supply	Check power supply Check filter gasket
	Evaporator inlet tube loose	Adjust pipe
	Loose internal overflow	Adjust overflow
	Dirty electrodes	Clean electrodes
	Defective solenoid valve	Check. Replace
Gear motor shutdown due to temperature	Condenser deterioration	Check. Replace
	Incorrect switch configuration	Check and change
	Internal probe failure	Check. Replace
Gear motor shutdown due to low current	No voltage to motor	Check wiring and plate output
	Motor with open winding	Replace geared motor
	Incorrect configuration of switches S6-7-8	Check
Gear motor stop due to high current	Over-stressing/blocking of the gear unit	Check evaporator (condition and cleanliness)
	Deterioration of condenser	Check. Replace
	Defective geared motor	Check. Replace
	Incorrect configuration of switches S6-7-8	Check
OTHER ALARMS		
Compressor does not run, but voltage is supplied	Compressor/electrical equipment defective	Check/replace
Compressor runs, but does not cool	Refrigeration system not working properly	Check load and components
Plate is energized, but does not turn on	Internal board fuse open	Replace (0.5 A)
Shutdown due to full store, but no ice	Compact: failure of NTC probe	Replace probe
	Compact: NOK positioning of NTC probe	Place probe in the center of the stainless steel tube
	Compact: misconfiguration of switches S2-3	In cold places it may be necessary to lower the set temperature to 2ºC.
	Modular: stop rocker stays up.	Check that it moves freely.
	Modular: faulty micro	Substitute

PROBLEMS	POSSIBLE CAUSES	SOLUTION
Very wet ice	Very high ambient temperature (> 35º C)	Change the location of the machine, if possible.
	Very high water temperature (> 30º C	Check the piping and filter in case condensation air or other heat source heats up the water in the pipes.
	Low water quality (> 1500	Lower the position of the water tank. Install water treatment equipment.
	Dirty condenser	Clean
	Lack of compressor cooling	Substitute
	Refrigerant leakage	Refill and in case of leakage, repair.
Water leakage in the lower bearing	Defective O-rings	Replace and possibly siliconize.
Abnormal noise in the machine	Fan or fan blades in bad condition or loose	Fix or substitute
	Vibrating pipes or components	Reposition and/or fix
	Noise in compressor	Substitute
Abnormal noise in the gear motor	Loose rear fan	Fix
	Defective ball bearings	Replace damaged bearing or replace motor
Noise in the gearbox	Defective ball bearing, no end or crowns in bad condition	Replace gearbox
Noise in the evaporator	Evaporator with scale buildup	Clean
	Scratched spindle and/or evaporator	Check and replace if necessary
	Evaporating temperature very low	Check cooling system
DISCHARGE PUMP (compact only)		
Ice storage is flooded	Check if valve is blocked	Clean or replace it
	Pump is broken	Replace pump
	Control board defective	Replace PCB
	Electrodes do not detect water	Disassemble and clean
Pump is always on	Electrodes detect water, even if there is no water	Disassemble and clean electrodes

9.2 PUMP DRAINAGE

PROBLEMS	POSSIBLE CAUSES	SOLUTION
The ice store is flooded	Check valve is blocked	Clean or replace it
	The pump is broken	Replace pump
	Electrodes do not detect water	Disassemble and clean, if problem persists, replace it
Pump is always on	Electrodes detect water, even if there is none	Disassemble and clean electrodes, if problem persists, replace them

10. TECHNICAL INFORMATION

OTHER TECHNICAL INFORMATION

For more technical information, scan the QR code below or click on the link:

- Technical Data Sheets
- User's manual
- Parts
- CAD / REVIT
- Technical videos

https://acortar.link/quFH9f